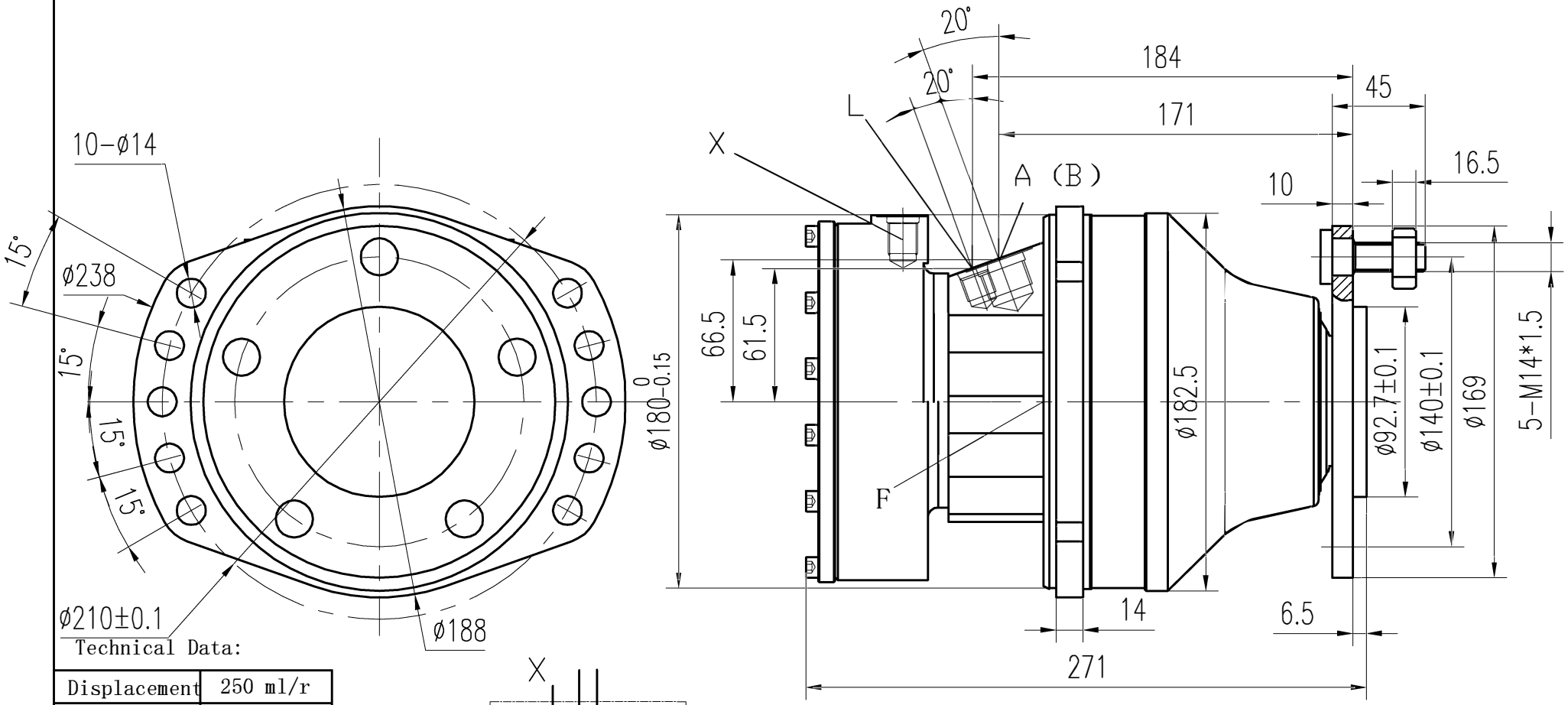

Technical Data:

Displacement	250 ml/r
Max power	16 kW
Rate pressure	25 MPa
Peak pressure	40 MPa
Rated torque (25MPa)	964 N.m
Rated speed	140 rpm
Speed range	0-250 rpm
Brake torque	2500 N.m
Brake release pressure (min)	1.2 MPa
Brake release pressure (max)	3 MPa
Brake bearing pressure	5 MPa

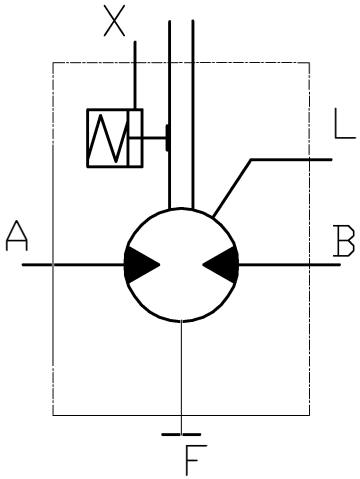

A、B	PORTS	ISO 1179-1	BSPP1/2"
L	Drainage	ISO 1179-1	BSPP3/8"
F	Drainage	ISO 1179-1	BSPP3/8"
X	Control of parking break	ISO 1179-1	BSPP3/8"